Investigating Somatosensory-Evoked Potentials in Conditions of Active Touch

1st Giulia Esposito
Institute of Neuroscience (IoNS)
Université Catholique de Louvain
Brussels, Belgium
giulia.esposito@uclouvain.be

2nd Julien Lambert
Institute of Neuroscience (IoNS)
Université Catholique de Louvain
Brussels, Belgium
julien.lambert@uclouvain.be

3rd Kevin Pleinnevaux
Institute of Neuroscience (IoNS)
Université Catholique de Louvain
Brussels, Belgium
kevin.pleinnevaux@uclouvain.be

4rd David Gueorguiev
Institute of Neuroscience (IoNS)
Université Catholique de Louvain
Brussels, Belgium
david.gueorguiev@uclouvain.be

5th Olivier Collignon
Institute of Neuroscience (IoNS)
Université Catholique de Louvain
Brussels, Belgium
olivier.collignon@uclouvain.be

6th André Mouraux
Institute of Neuroscience (IoNS)
Université Catholique de Louvain
Brussels, Belgium
andre.mouraux@uclouvain.be

***Abstract*—Exploratory movements are a key component of tactile sensing to extract haptic information from the external world. While much of the research in the somatosensory field has employed artificial tactile stimuli delivered in passive touch conditions, more recently, much interest has been put in the study of active, dynamic touch. An ecological study of tactile processing during active touch comes with several challenges, particularly with regard to electrophysiological techniques, such as scalp electroencephalography. Here, we report a novel experimental setup to record somatosensory evoked potentials in conditions of active, dynamic touch, where participants performed voluntary and minimally controlled exploratory finger-sliding movements against a surface to come into contact with an edged haptic stimulus. Our results showed that it is possible to record cortical responses to a physical, transient haptic stimulus. The pattern of responses revealed early-latency components with a contralateral topography, consistent with activity originating from the primary somatosensory cortex, followed by later components displaying a more central/bilateral pattern of activity, consistent with activity originating from higher-order areas. In summary, our results reveal the feasibility of recording time-locked cortical responses to tactile stimuli in conditions of active touch, with important implications to study somatosensory processing related to active tactile sensing.**

***Index Terms*—electroencephalography, somatosensory-evoked potentials, active touch.**

I. Introduction

Touch is often a dynamic process, and we actively perform exploratory movements to extract haptic information from the external world: ''Is this fabric rough or smooth?'; ''Is there a bump or indentation on this surface?'.

Much of the work investigating the sense of touch has employed tactile stimulations delivered in conditions of passive touch, especially when exploring the cortical processing of somatosensory inputs using scalp electroencephalography (EEG) (e.g. [1]–[3]). Although passive touch can be both static and dynamic, it is inherently different from active touch. In active touch conditions, the subject performs voluntary, dynamic movements to explore the texture or shape being presented to them [4]. As such, active touch is a complex process which involves integration of somatosensory and proprioceptive inputs, as well as sensorimotor control [5].

In passive static touch, no movement of the subject's limbs is required to perceive the tactile stimulus, which can take the form of a pressure, vibrotactile, or electrical stimulation applied onto an area of the subject's skin. In passive dynamic touch, a haptic stimulus, such as a piece of fabric, can be moved against the participant's skin (e.g. [6], [7]), or the movement of the subject's limb can be externally guided, for example using a robot. Thus, while both active and passive touch involve mechanical deformation of the skin, in passive touch conditions either the stimulus is displaced against the skin, or the subject's limb is passively displaced against the stimulus, while the key feature of active touch is the voluntary component associated with displacement of the skin against a surface. Crucially, active touch is characterized by a purposeful act aimed at optimally extracting haptic information from the external world [4], [8].

Event-related brain potentials (ERPs) represent discrete waveforms of cortical activity recorded using EEG following the onset of a sensory stimulus. ERPs are classified based on the polarity of the signal (P= positive; N= negative), and the latency at which they occur following stimulation onset (e.g., the P300 is a positive deflection occurring around 300 ms following the onset of stimulation) [9]–[11]. Several waveforms representing somatosensory-evoked potentials (SEPs) have been described, in conditions of passive touch. Among these, short-latency SEPs are often recorded in paradigms implementing direct transcutaneous electrical stimulation of a peripheral nerve at the level of the wrist or of the fingertip skin, such as the N20/P20 complex elicited by median nerve stimulation [12]–[14]. These early responses have been shown

Co-funded by the European Union's H2020 Research and Innovation Program (Grant Agreement No. 806114, MULTITOUCH) and by the European Union (ERC, TANGO, Grant Agreement No. 101117300).

to be localized over contralateral parietal and central scalp electrodes, indicating involvement of the hand representation within the primary somatosensory cortex (S1) [15]. Mid-latency SEPs have also been recorded in response to vibrotactile stimuli [16], [17]. These include the N30, P50, N70, and P100 waveforms [18]. The first three peaks have been shown to be stronger and to display shorter latencies at contralateral compared to ipsilateral electrodes, suggesting that they also represent activity originating at least partly from S1 [18]. The P100, on the other hand, is characterized by bilateral activation, suggesting that it might predominantly reflect activity originating from higher somatosensory areas, such as (bilateral) activation of the secondary somatosensory cortex (S2) and/or multimodal areas [3]. Thus, somatosensory areas appear to be sequentially activated during the processing of somatosensory stimuli [3].

To date, no studies have characterized SEPs in conditions of active, dynamic touch, when participants perform voluntary exploratory finger-sliding movements to generate the tactile stimulation. Several technical challenges arise when investigating SEPs in ecological conditions of active, dynamic touch. Indeed, in experimental designs involving active touch, the experimenter has little to no control over exactly when and how the stimulation is delivered to the subjects: it is their free, dynamic movements that will lead them to encounter the haptic stimulus. Importantly, since the timing of stimulation is not controlled by the experimenter, time-locking the exact moment at which the stimulus is delivered (i.e. encountered by the subject performing the movement), which represents a crucial aspect of EEG experiments, is a difficult endeavor.

In this study, we aimed to test the feasibility of recording SEPs when participants actively performed sliding movements on a flat surface using the index finger of their dominant hand and encountered physical edged tactile stimuli. Investigating cortical responses to transient, edged tactile stimuli in such conditions is particularly relevant to the study of processing and perception of planar shapes. When exploring planar shapes, we typically employ exploration strategies such as contour following with oscillating motion, where the finger crosses the contours of the shape while remaining in their proximity via small back and forth movements, or contour scanning, where the finger crosses the contours of the shape via relatively large movements reaching further away from the shape's boundaries [19], [20], similarly to the sliding movements that participants performed in our study to encounter and to cross the tactile stimuli. Here, we describe the experimental setup, methodology and EEG analysis steps, and characterize the main waveforms recorded using our design. We hope that our novel methodological approach and experimental setup will help fellow haptics researchers develop and design new approaches for the study of the cortical processing of tactile stimuli in ecological active touch conditions.

II. METHODS

A. Participants

Seventeen healthy participants (7 females, 10 males; aged 22 to 47; 4 left-handed) with no self-reported history of neurological, psychiatric, or motor disorders volunteered to take part in the experiment. All participants gave written informed consent prior to participation. Data from one participant was excluded due to technical issues that led to very low signal-to-noise ratio of the recorded signals. Data collection had to be discontinued from another participant due to technical issues with the experimental setup. The final sample thus included data from a total of fifteen participants. The study received ethical approval from the Saint-Luc - UCLouvain ethics committee (approval number: 2023/11AVR/177).

B. Experimental Setup

The haptic stimulus was a small 3D-printed trapezoidal prism (3.2 mm x 14 mm) strip of plastic mounted on the upper face of a wooden parallelepiped (145.6 mm x 25 mm x 25 mm) via 10 mm rods, 90.5 mm from the left edge (Fig. 1b). To monitor finger position and generate trigger events in the EEG recording upon participants' reaching the haptic stimulus with their exploring finger, a parallel-plane laser light-based position tracking sensor (Neonode NNAMC1220PCEV (122 mm), Neonode Inc., Sweden, Fig. 1a) was placed at 25 mm distance behind the wooden platform. This tracking device generated a continuous 200 Hz stream of values depending on the position of the finger onto the plate. Using as threshold the value of the position tracking sensor corresponding to when the finger was positioned over the plastic edge, the position of the finger was monitored during each trial to generate a trigger marking when the finger slid above the plastic edge.

To more precisely identify when the finger encountered the plastic edge, an accelerometer (amplifier Nexus 2696-A-0S4, tri-axial accelerometer type 4524-B, Brüel & Kjaer, Danemark) was attached via double-sided tape to the nail of the index finger that participants used to perform the exploratory movements. To stabilize the accelerometer sensor, participants wore two plastic elastic ring bands around their index finger, to ensure that the wire attached to the sensor remained in place. The accelerometer was used to record the vibrations generated when the sliding finger encountered the edged stimulus.

C. Procedure

Participants were asked to use the index fingertip of their dominant hand to perform horizontal left-to-right strokes on the platform. To avoid any visual feedback, the platform was placed inside a wooden box presenting an opening at the front where participants could place their hand to perform the exploratory movements. The location of the platform inside the box was adjusted so that both the platform and the participant's hand were outside of the participants' field of vision. To avoid any auditory feedback, participants wore earphones through which white noise was played. Two participants were not presented with white noise. However, the auditory feedback

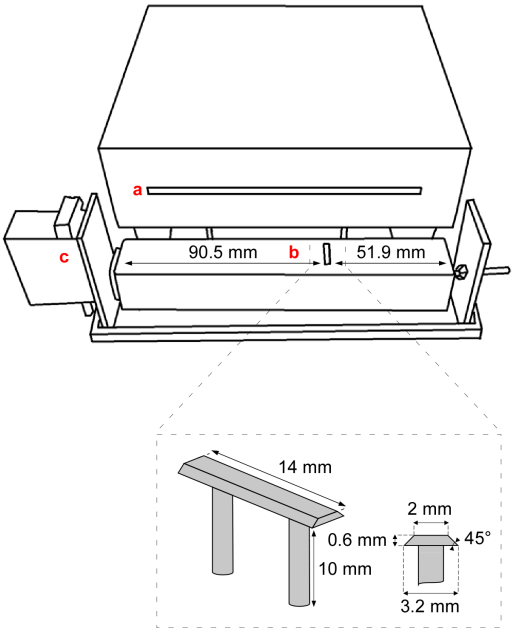

Fig. 1. Experimental setup. The wooden platform onto which participants performed fingertip sliding strokes was fixed in front of a position sensor (a) used to send trigger events to the EEG recording system when the exploring finger reached the location of the haptic stimulus (b), which was mounted onto one face of the wooden platform. The wooden platform was connected to a DC stepper motor (c), which allows to rotate the platform to display 3 faces, where additional stimuli at different locations may be fixed. For this proof-of-concept study, only one of the faces and one stimulus location was used. The section below shows a detailed view of the tactile stimulus and its dimensions.

from the finger encountering the haptic stimulus was very faint (as it was not produced by an external motor or stimulation device), and these participants never reported hearing a sound associated with the change in friction upon questioning.

Participants were instructed to perform the strokes maintaining a relatively stable but natural exploration velocity, avoiding very fast or very slow strokes. After each stroke, participants were instructed to remove their hand from the box, and to wait for a signal from the experimenter before re-contacting the platform and initiating the next stroke. When re-contacting the platform, participants were allowed to look at their hand to properly position their exploring finger at the starting position. To ensure a baseline period of minimal accelerometer signal variations, participants were instructed to wait about a second after contacting the platform prior to initiating the next stroke. The number of trials was set to 150, divided in three blocks of 50.

Pilot tests had revealed a delay between the trigger event sent via the position sensor and the actual contact onset of the finger with the tactile stimuli which was tracked via the accelerometer recording. This delay appeared to be variable and dependent on the velocity of exploration. For this reason, the accelerometer recording was used to create new trigger events marking the precise onset of stimulation for each participant, as described in the next section.

D. Alignment of Trigger Events with Accelerometer Recordings

Within the vertical (z-axis) accelerometer recordings, we expected to see a transient change in signal amplitude occurring when the fingertip pad of the exploring finger contacted the edge of the rectangular stimulus. In most trials, a clear onset could be observed upon visual inspection (Fig. 2 top left). For some trials, the accelerometer signal was noisier and we could not observe clear contact onset (Fig. 2, top right).

Fig. 2 (bottom panel) shows the rectified accelerometer signals averaged across all trials included in the EEG analysis, illustrating how, on average, the 0 ms time point following alignment of trigger events corresponded to a sharp change within the accelerometer recordings.

To identify the contact onset within the z-axis accelerometer signals, a 200 ms baseline was defined upon visual inspection of each individual trial for each participant. The chosen start time of the baseline was defined depending on the noisiness of the signal in the 1000 ms prior to the position sensor trigger event, as well as the delay between the position sensor trigger event and the change in accelerometer signal corresponding to the time of contact of the finger with the haptic stimulus.

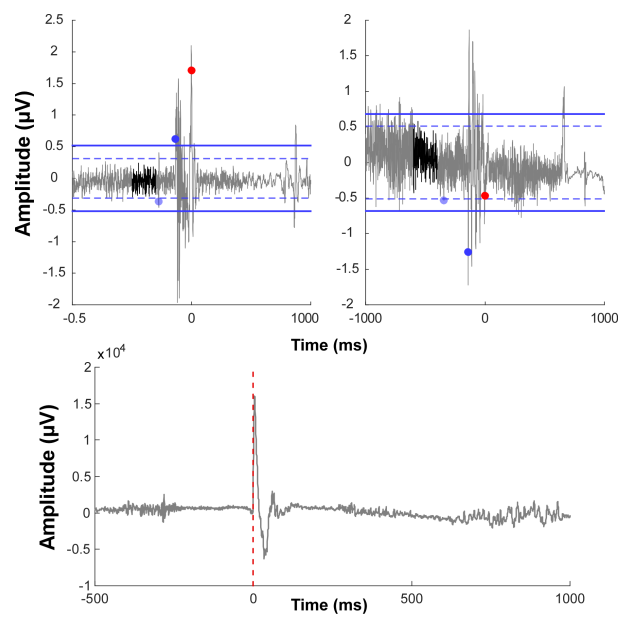

Fig. 2. Determination of contact onsets from the accelerometer z-axis displacement recording. The top left panel shows the accelerometer signal recorded in a trial displaying clear onset/offset peaks. The top right panel shows a recording with a lower signal-to-noise-ratio. The red dots represent the trigger events generated by the position sensor. Note that the accelerometer signals show that the actual onset of stimulation due to fingertip contact with the plastic edge preceded the trigger, justifying the use of the accelerometer signal to mark the actual stimulation onsets. The chosen baseline interval is plotted in black. Horizontal dotted blue lines represent the default +/- 3*SD threshold, Light blue dots represent the time of contact onset found using this default threshold. Horizontal blue lines represent the +/- x*SD threshold selected to define the time of contact onset. Dark blue dots represent the accelerometer-derived time of contact onset using this adjusted threshold. The bottom panel shows the group-average of rectified accelerometer signals, aligned relative to the accelerometer-derived triggers (dashed red line).

By default, the baseline started at -400 ms relative to the position sensor trigger event, and was adjusted on a trial-by-trial basis for each participant, with a starting time ranging from -800 ms to -250 ms prior to position sensor trigger event. The time of the first peak in the accelerometer recording (corresponding to the onset of contact between the finger and the haptic stimulus) was identified as the time in which the absolute amplitude of the signal exceeded x times the standard deviation of the baseline (x*SD threshold). The default value of x was set to 3. Due to the high trial-by-trial variability of the accelerometer signals, the value of x value was adjusted on a trial-by-trial basis using values ranging from 3 to 8, as follows. The accelerometer signal was plotted, with the accelerometer-derived trigger event displayed as a vertical line. If, upon visual inspection, the new trigger event did not correspond to a clear change in the accelerometer amplitude, the baseline and/or x*SD threshold parameters were adjusted (Fig. 2). Both the baseline and the x*SD threshold were adjusted as needed, due to trial-by-trial variability of signal noisiness. The corresponding time points were then added to the EEG recording file as new trigger events, and subsequently used to segment the EEG signals for further analysis. Lastly, the accelerometer signals were segmented between -500 ms to +1000 ms relative to the new event trigger. Next, each epoch was visually inspected to determine whether the accelerometer signals allowed determination of the new trigger events. When participants performed the exploring movements, they would occasionally hit the metal support located at the end of the platform. This would not only generate a strong peak in the accelerometer recording (visible in Fig. 2, top panels), but also potentially a subsequent somatosensory response, as participants would receive a rather strong tactile input by the sudden contact with the metal support on the side of their fingertip, which could therefore translate to an additional response in the EEG recording. For this reason, trials were excluded whenever the time interval between the event trigger and the end of the movement was less than 200 ms.

E. EEG Recordings

Participants were instructed to relax, avoid moving their head and body as much as possible, and fixate their gaze on a fixation cross placed in front of them. An EEG recording system (ActiveTwo, Biosemi, the Netherlands) and a 64 Ag-AgCl electrode cap with pre-amplified electrodes (Biosemi, the Netherlands) was used for EEG recordings. The cap was placed on the participants' scalp according to the International 10/10 system. Sample rate was set at 2048 Hz and impedances (electrode offsets) were kept below 20 mV.

F. EEG Preprocessing

First, the EEG signals were re-referenced to the average of all scalp electrodes. Next, a 0.1 Hz filter (4th order Butterworth filter) was applied to the continuous EEG signals. This type of filter is typically used to characterize early, transient components (<100 ms) [21], [22]. However, the noisiness of the resulting waveforms and the fact that, upon visual inspection, we did not observe any distinct transient waveforms motivated us to instead apply a bandpass filter between 0.1 Hz and 40 Hz (4th order Butterworth filter), which is commonly used for the recording of SEPs using different types of stimulation when the focus is not specifically on short-latency components [1], [3], [23]. This filtering window, however, revealed strong slow drifts in the EEG signals, which were likely due to expectation of the stimulus during the sliding movements. Given the presence such drifts in the signals, the EEG signals were also bandpass-filtered between 3 Hz and 40 Hz (Fig. 3).

The following pre-processing steps were applied to the 0.1 Hz highpass-only, and to the 0.1 Hz – 40 Hz and the 3 Hz – 40 Hz filtered signals. An additional notch FFT filter (50 Hz, 100 Hz, 150 Hz, 200 Hz; notch width: 2 Hz; slope cutoff width: 2 Hz) was applied. The continuous EEG signals were then segmented from –200 ms to +600 ms relative to the accelerometer-based onset of contact with the haptic stimulus. A DC removal and linear detrend was then applied to the epoched signals. Ocular artifacts (eye blinks and lateral eye movements) were removed following an independent component analysis (ICA) (calculated from the 0.1 Hz – 40 Hz filtered signals). This led to the removal of a total 27 ICs across 13 participants (mean= 1.8; SD= 1.08). To remove further artifacts, epochs were excluded when the signal exceeded 100 µV in the interval between –200 ms and +400 ms relative to the accelerometer-based onset of contact with the haptic stimulus. A baseline correction (-200 ms to 0 ms) was then applied to the epoched data. For left-handed participants, left and right electrodes were flipped. Lastly, trials were averaged in the time domain and grand-averaged across participants for visualization.

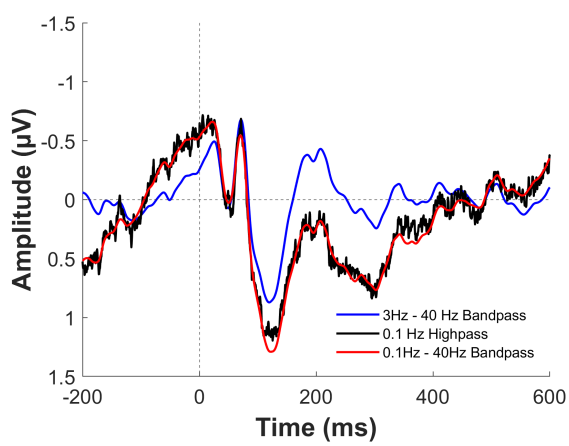

Fig. 3. Signal filtering procedure. The three lines represent group-level average of activity at electrode CP3 preprocessed using a highpass only and two different highpass cutoff frequencies in the bandpass filter applied to the continuous EEG recordings. The signal noisiness was high when only a highpass filter was applied to the data (black trace). When the cutoff highpass frequency was set to 0.1 Hz, a strong drift was visible in the pre-stimulus interval (red trace), which was attenuated in the 3 Hz high-pass filtered signals (blue trace).

G. Assessment of Significant Responses

To assess the presence of significant ERP waveforms, a cluster-based permutation test against 0 was performed as follows, using the 3 Hz – 40 Hz filtered signals. Individual participants' trials were averaged in the time domain. Next, a non-parametric point-by-point cluster-based permutation test was performed to identify, at each channel, time-intervals of the averaged ERP waveforms that deviated significantly from zero across participants [24], [25]. The approach assumes that stimulus-evoked amplitude changes in the signal will tend to occur over contiguous time points [26]. First, the ERP waveforms were compared using a point-by-point t-test against zero. Then, clusters of contiguous time points above the critical t-value corresponding to a p-value of 0.05 were identified, and an estimate of the magnitude of each cluster was computed by summing the t-values constituting each cluster. Random permutation testing (2000 permutations) was then used to obtain a reference distribution of maximum cluster magnitude. As cluster magnitudes could be negative or positive depending on the polarity of the signals, clusters in the observed data were regarded as significant when their magnitude was either above the 97.5th percentile or below the 2.5th percentiles (corresponding to a 2-sided test).

H. Differences across Contralateral and Ipsilateral Electrodes

To assess whether the ERP components exhibited hemispheric lateralization, a paired cluster-based permutation test was performed as described in the previous section, comparing the signals recorded at the following electrode pairs: C3 vs. C4 and CP3 vs. CP4.

III. RESULTS

For nine participants, a few trigger events were missing due to faulty tracking of the position sensor. Three participants performed an extra trial due to an error by the experimenter in tracking the number of performed trials. One participant reported looking at their hand during the first seventeen trials. These trials were excluded and the participant performed seventeen extra trials at the end of the experiment. One participant performed an extra block at the end of the experiment, as he performed very rapid movements in the second block. However, since visual inspection of the signals showed that the velocity they used was acceptable, the trials from the extra block were not included in the analysis. A total of 92 epochs across 13 participants were excluded from the dataset. Of these, 35 represented extra triggers accidentally sent by the position sensor when participants displaced their finger between trials, or extra triggers sent by the position sensor within the same trials. The remaining 57 epochs represented actual trials that were excluded (among 12 participants) due to unclear determination of the accelerometer-derived trigger because of noisy signals or because participants performed excessively rapid exploration movements. Among real trials, the accelerometer signals allowed marking contact onsets in most cases (mean= 97.4%, SD= 2.5%). In total, 2152 trials were included in the final dataset for further processing (average per participant: 143.5, SD: 5.9).

Following EEG artifact rejection, a total of 23 trials were removed across 5 participants in the 0.1 Hz – 40 Hz filtered signals, and a total of 7 trials were removed across 3 participants in the 3 Hz – 40 Hz filtered signals.

A. SEP Responses Across Pre-Selected Electrodes and Topographical Distribution of Activity Over Time

Based on previous studies characterizing SEPs in static touch conditions, we expected early-latency responses originating from the contralateral S1, and later responses having a central topographic distribution. Therefore, here we report the results across six pre-selected electrodes: C3 and CP3 (contralateral to the stimulated finger); Fz and Cz (fronto-central); C4 and CP4 (ipsilateral to the stimulated finger) (3 Hz - 40 Hz bandpass-filtered signals). Visual inspection of the responses between -200 ms and +400 ms relative to the accelerometer-based event triggers revealed SEP responses across contralateral, fronto-central as well as ipsilateral electrodes. Visual inspection of the topographies over time between 0 and 240 ms revealed that, earlier components (before $\sim$120 ms) were characterized by a clear lateralization, contralateral to the exploring finger. Later, components (between $\sim$120-220 ms) appeared to be characterized by a more central/bilateral scalp topography (Fig. 4).

B. Assessment of Significant Responses

The cluster-based permutation test revealed several time-intervals where activity was significantly different from 0 ($p<0.05$) at contralateral (C3, CP3), fronto-central (Fz, Cz), and ipsilateral (C4, CP4) electrodes (Fig. 5).

The onset, offset, peak, and cluster statistics (p-values) of the time intervals where activity was significantly different from 0 are reported in Table I.

C. Differences across Contralateral and Ipsilateral Electrodes.

Cluster-based permutation paired tests revealed time-intervals where activity was significantly different between contralateral and ipsilateral electrode pairs (C3 vs. C4; CP3 vs. CP4) (Fig. 6).

The onset, offset, and cluster statistics (p-values) of the time intervals that differed significantly between ipsilateral and contralateral electrode pairs are reported in Table II.

IV. DISCUSSION

The current experiment aimed to record, for the first time, SEPs elicited in conditions of active, dynamic touch, in response to physical edged haptic stimuli. In recent years, research in the field of haptics and tactile perception has seen a growing interest in the study of tactile sensing in conditions of active, voluntary dynamic touch (e.g., [6], [27]–[31]). However, the cortical responses to haptic stimuli delivered in conditions of active dynamic touch remain unknown, possibly due to the technical challenges associated with measuring such

responses while participants perform voluntary movements. Perhaps the most important challenge for recording ERPs in such conditions is the difficulty of time-locking responses to the actual onset of the mechanosensory stimulation produced by the subjects' free movements. Here, to overcome this challenge, we developed a novel experimental setup that allowed us to align EEG responses to the moment at which the subject's fingertip encountered the physical edged haptic stimulus. Our analysis revealed that our experimental setup successfully allowed us to identify the onset of stimulation and thereby to record SEP components, with a topographical sequence consistent with hierarchical somatosensory processing, starting within the hand representation of the contralateral S1, and then progressing towards bilateral responses possibly originating from S2 and/or multimodal areas [32], [33].

The earliest component we identified was a negative deflection appearing at 25 ms at contralateral centro-parietal electrode CP3. The scalp distribution of this early negativity resembled the N20 component, one of the earliest SEPs that can be measured using scalp EEG, which reflects early stages of stimulus processing within S1 [15]. This component is characterized by a dipolar configuration, with a concurrent positivity observed at frontal electrodes [12], [34], which is consistent with the topography we observed at this latency, as we found a concomitant significant positivity at frontal elec-

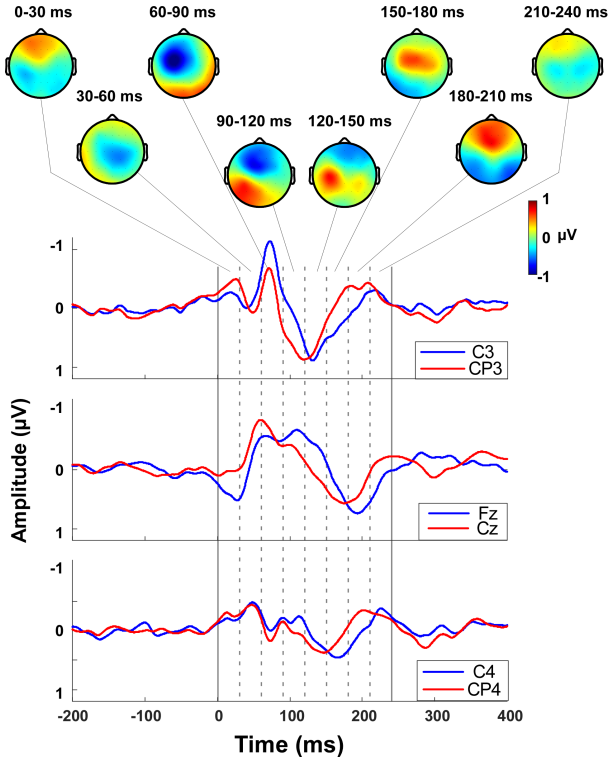

Fig. 4. Group-level averaged topographical maps and time course of the signals recorded at contralateral (C3, CP3), centro-frontal (Fz, Cz), and ipsilateral (C4, CP4) electrodes. Each topographical map represents scalp activity within 30 ms intervals between 0 and 240 ms (top panel). The bottom panels represent EEG responses in the time domain. Dashed lines mark 30 ms interval.

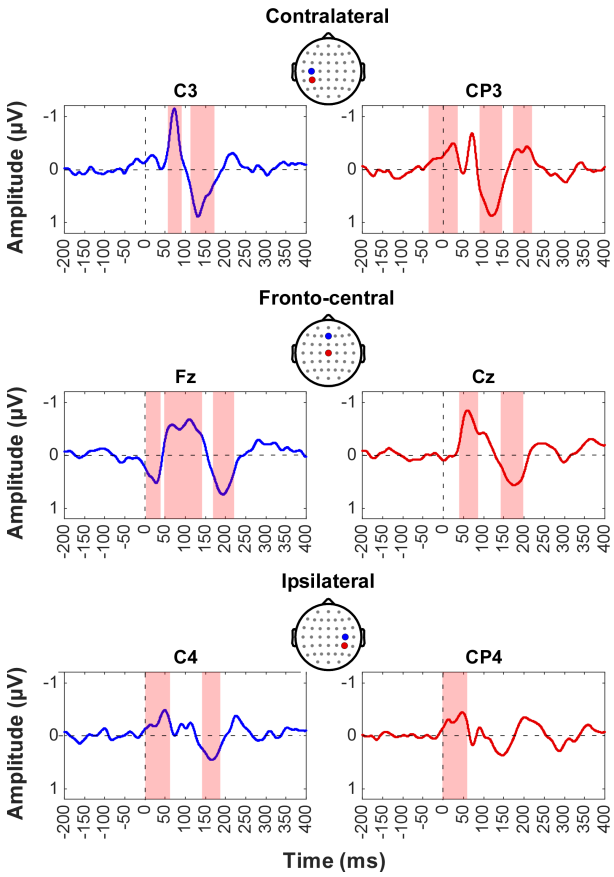

Fig. 5. Group-level averaged waveforms across contralateral (C3, CP3), fronto-central (Fz, Cz), and ipsilateral (C4, CP4) electrodes. Shaded red areas represent time intervals of activity that were significantly different from 0 (point-by-point cluster-based permutation test; $p<0.05$).

TABLE I
ONE-SAMPLE CLUSTER-BASED PERMUTATION TEST STATISTICS ACROSS CONTRALATERAL (C3, CP3), FRONTO-CENTRAL (FZ, CZ), AND IPSILATERAL (C4, CP4) ELECTRODES.

Electrode	Onset (ms)	Offset (ms)	Peak (ms)	Cluster p-value
C3	57	91	72	0.008
	113	172	131	0.002
CP3	-35	36	25	<0.001
	90	146	119	0.003
	173	221	207	0.029
Fz	2	39	27	0.021
	48	141	109	<0.001
	169	221	193	0.002
Cz	39	86	59	<0.001
	142	199	174	0.002
C4	0	62	48	0.002
	139	186	165	0.006
CP4	-2	59	47	<0.001

trode Fz. However, the N20 component is typically recorded in response to electrical stimuli generating a highly synchronized afferent volley. Furthermore, the latency of the components we identified must be interpreted cautiously as mechanosensory stimulation may have initiated before the accelerometer-derived trigger. Thus, despite similarities in latency and scalp distribution, it is premature to interpret the early negativity we observed in our study as an equivalent of the somatosensory N20 observed after transcutaneous electrical stimulation of the median nerve. Nevertheless, the latency and topography of the response clearly indicates that it reflects early stages of somatosensory processing originating primarily from the hand representation of the contralateral S1.

The second component we recorded was a negativity appearing at 72 ms at contralateral electrode C3. This deflection displayed a similar latency and scalp topography as the somatosensory N70 component, which is typically localized around central and posterior contralateral electrodes [3] and is thought to also originate from the contralateral S1 [18]. At this time interval, we also observed a significant lateralization when comparing the signals recorded at electrodes C3 and C4, further suggesting that this peak is compatible with a mid-latency SEP whose activity likely originates from S1.

Next, we observed a central bilateral positivity, peaking at 119 ms at CP3 and at 131 ms at C3. Positive deflections at this latency are often reported as the somatosensory P100, which is associated with explicit perception of somatosensory stimulation [2]. This component is thought to originate within S2 bilaterally and to be associated with a bilateral pattern of scalp distribution [35], [36]. Compared to what we observed, the P100 is usually reported at shorter latencies (80-110 ms) [23], [36]. However, as discussed for the earlier components, given the novelty of our stimulation paradigm, which involved dynamically self-generated somatosensory inputs, whose exact duration and intensity depended on the nature of participants' free exploration strategy (such as the pressure they applied on the platform and the speed with which they explored it), the exact latencies of SEPs we measured should be interpreted cautiously, as discussed below. Furthermore, when assessing lateralization of the SEP waveforms we recorded, we did find a statistically significant difference between both pairs of contralateral and ipsilateral electrodes (C3 vs. C4; CP3 vs. CP4), suggesting a contribution of activity originating from the primary somatosensory cortex at these later latencies.

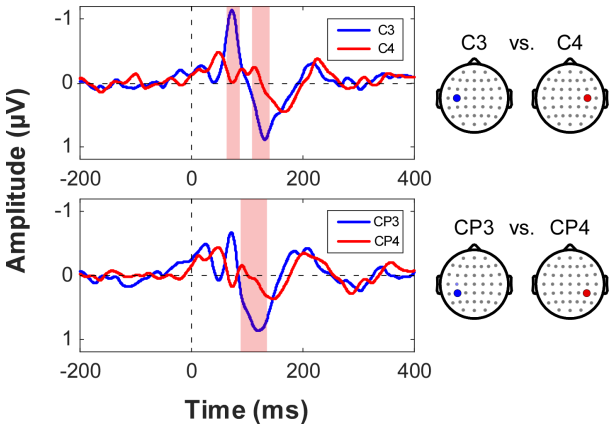

Fig. 6. Comparison of group-level averaged waveforms between pairs of contralateral and ipsilateral electrodes (C3 vs. C4; CP3 vs. CP4). Shaded red areas represent time intervals where activity differed significantly between electrode pairs ($p<0.05$).

TABLE II
PAIRED-SAMPLE CLUSTER-BASED PERMUTATION TEST STATISTICS BETWEEN PAIRS OF CONTRALATERAL AND IPSILATERAL ELECTRODES (C3 VS. C4; CP3 VS. CP4).

Electrode	Onset (ms)	Offset (ms)	Cluster p-value
C3 vs C4	62	86	0.020
	108	140	0.019
CP3 vs. CP4	88	135	0.002

At fronto-central scalp electrodes, we measured a negativity peaking at 109 ms at Fz and at 59 ms at Cz, followed by a positivity peaking at 174 ms at Cz and at 193 ms at Fz. This is consistent with the N1/P2 component, or the vertex potential, which has been reported in response to both innocuous and painful somatosensory stimulation, as well as auditory stimulation [1], [37], and is thought to be an index of higher level stimulus processing, mainly associated with the saliency of the stimulus irrespective of modality [37]. The temporal evolution of topographical distribution of activity revealed that, for earlier components, responses were strongly lateralized over the contralateral scalp hemisphere, consistent with early stages of somatosensory processing mainly occurring within S1. After ∼120 ms, responses were characterized by a central and bilateral scalp distribution, consistent with activity originating from higher cortical areas, such as S2. These results are consistent with sequential activation of somatosensory areas [3], and resemble previous reports investigating SEPs in conditions of passive touch [1]. However, the exact latencies we report are less consistent with such previous reports. Our stimuli differ from phasic short-lasting electrical, mechanical, or vibrotactile stimuli employed in passive touch paradigms, since the somatosensory input was dynamically self-generated by participants in our study. The skin is an elastic organ, and during sliding complex spatiotemporal patterns of skin deformation and strain occur, which in turn give rise to complex patterns of mechanoreceptor activation [38]. Importantly, it has been shown that fingertip strains vary with the normal force applied against the fingertip as well as with the velocity with which the stimulus (a flat glass plate) was displaced against the fingertip [38]. Furthermore, scanning speed has been shown to affect vibrations elicited at the fingertip during texture exploration, which would also in turn affect responses of mechanoreceptive afferents [39]. Importantly, the movements performed by subjects in our study were minimally controlled. No specific constraints were imposed on subjects, besides instructions to avoid very fast or very slow movements. Thus, it is likely that

the pattern and magnitude of mechanoreceptor activation self-generated by participants in our experiment was influenced by the pressure used by subjects when sliding their finger on the platform, as well as their speed of exploration. Such variations are not only to be expected between participants, but some variability is also likely to occur on a trial-by-trial basis within participants. Thus, compared to passive touch designs, we can expect more variability in the amplitude as well as the latency of the recorded SEPs. To address such questions, future efforts should be made to characterize the exact dynamics of fingertip deformation during sliding and contact with a physical edged tactile stimulus, for example using high-speed cameras [40], and subsequently using microneurography and modeling approaches to elucidate the exact nature of afferent responses during such conditions.

One potential limitation of our stimulation setup lies in the determination of contact onset from the accelerometer z-axis recordings. While we defined contact onsets as the first time point associated with a sharp change in accelerometer signal, it is possible that contact of the finger with the edge and hence onset of mechanosensory stimulation had already occurred some milliseconds before the accelerometer-derived trigger. Thus, it is possible that a small delay was still present in the event triggers we defined a posteriori, thus leading to shorter SEP latencies. Furthermore, it is also possible that the tactile input was strongest when the pulp of the fingertip was in full contact with the tactile stimulus, thus leading to longer recorded SEP latencies. For this reason, as discussed above, the exact latencies reported in this study have to be cautiously interpreted. Nevertheless, the overall pattern and cortical distribution of responses we observed is consistent with well-characterized SEP components triggered, for example, by transcutaneous electrical nerve stimulation. To obtain more robust and reproducible results on the exact timing of SEPs in conditions of active, dynamic touch, future efforts should be made into assessing the exact dynamics of finger displacement during active sliding movements to determine the most appropriate method to define true contact onset of the exploring fingertip with the haptic stimuli. During pilot experiments, unsuccessful attempts were made to assess true contact onset by measuring the impedance between the finger and the edge printed using electrically-conductive plastic.

Our results have important implications to address questions in the field of active tactile sensing and processing. For instance, it is widely known that cortical responses to somatosensory stimuli are suppressed or reduced during voluntary movement, via a mechanism known as movement-related somatosensory gating [41], [42]. However, in most studies reporting such an effect, the active movements were unrelated to the concomitantly delivered tactile stimulation. Early work on primates has in fact shown that, when movements are necessary to perceive the somatosensory stimuli, activity in S1 neurons having receptive fields associated with the fingertip performing the exploratory movements is enhanced, rather than suppressed. Specifically, the proportion of neurons showing enhanced activity increases along the hierarchical rostral-to-caudal sequential processing within S1, with increasing activation going from area 3b, to area 1, to area 2. An opposite pattern of modulation is instead observed for neurons with receptive fields outside of the digit coming into contact with the tactile stimuli [43]. Our setup could help further investigate movement-related somatosensory gating in humans by implementing matched active and passive dynamic touch conditions, as done by [6].

A key issue to consider is that, in active touch conditions, it is difficult to disentangle motor signals from purely tactile signals, and that, in such conditions, motor-related activity may reduce the signal-to-noise ratio of the recorded responses. Nevertheless, previous studies have been able to characterize EEG responses to both textures [29], [44] and to transient changes in friction during active touch. Importantly, [6] showed that periodic EEG responses were comparable (although smaller in amplitude) to those recorded in matched passive touch conditions [6]. Importantly, compared to such previous EEG investigations of tactile processing during active touch, the main contribution of our study is the characterization of the temporal pattern of time-locked responses to a single tactile event. While such work has investigated EEG responses in the frequency and the time-frequency domains, we believe that such similarities should also be observable in the time domain through recordings of SEPs. Having time-locked responses precisely to the onset of contact with the tactile stimulus, as well as the similarity of the SEPs we recorded with well-characterized SEPs recorded in conditions of passive touch make us confident that the responses we observed were largely somatosensory in nature. However, it is still possible that sliding over the tactile stimulus triggered some reaction of motor-related activity, which would have also been time-locked to the stimulation onset. To further investigate this possibility and fully disentangle motor-related activity from purely somatosensory responses, future work should include electromyography recordings, as well as normal and tangential force measurements. Furthermore, future studies should also aim to perform similar active-passive touch matching conditions to [6] to investigate how responses to tactile edges vary with and without voluntary movement.

In conclusion, our study sets the basis for overcoming important methodological challenges associated with measuring cortical responses to naturalistic tactile stimuli encountered by participants via voluntary exploratory movements. With the growing interest on tactile perception in conditions of active, dynamic touch, the use of EEG to record cortical responses to tactile stimuli encountered via voluntary movement could help elucidate the mechanisms underlying behavioral outcomes obtained via psychophysical approaches, such as participants' ability to recognize planar shapes during haptic exploration [45]. Furthermore, measuring time-locked responses using scalp EEG is also advantageous to complement results obtained using other neuroimaging techniques, such as functional magnetic resonance imaging (fMRI). Indeed, while fMRI allows to determine the cortical locus of activity associated with sensory processing with high spatial resolution in the

order of few millimeters, it does not allow determination of the precise timing of time-locked response at the millisecond scale, due to its temporal resolution being limited, at best, to half a second [46]. Our approach involving SEP recordings, on the other hand, allows us to asses cortical responses with a high temporal precision at the millisecond scale. Thanks to the somatotopical organization of S1, our approach also allows to differentiate activity originating from S1 or higher-order areas, albeit with much lower spatial resolution, thus enabling an investigation of the temporal evolution of somatosensory responses and the sequential activation along the somatosensory cortical hierarchy. Our work also opens new possibilities to elucidate additional cortical mechanisms associated with active dynamic touch, such as movement-related somatosensory gating. Importantly, we show that effectively time-locking the time of finger contact with the physical haptic stimulus allowed us to characterize SEP components of tactile processing in conditions of active touch, which appear consistent in both their latency and topographical distribution with SEPs identified in studies involving passive touch conditions. Future investigations will be necessary to further characterize such components and assess their reproducibility.

References

[1] M. Guidotti, C. Beaurieux, P. Marionnaud, F. Bonnet-Brilhault, C. Wardak, and M. Latinus, "Skin type and nerve effects on cortical tactile processing: a somatosensory evoked potentials study," *Journal of Neurophysiology*, vol. 130, no. 3, pp. 547–556, Sep. 2023, publisher: American Physiological Society. [Online]. Available: https://journals.physiology.org/doi/full/10.1152/jn.00444.2022

[2] R. Schubert, F. Blankenburg, S. Lemm, A. Villringer, and G. Curio, "Now you feel it–now you don't: ERP correlates of somatosensory awareness," *Psychophysiology*, vol. 43, no. 1, pp. 31–40, Jan. 2006.

[3] H. Hämäläinen, J. Kekoni, M. Sams, K. Reinikainen, and R. Näätänen, "Human somatosensory evoked potentials to mechanical pulses and vibration: contributions of SI and SII somatosensory cortices to P50 and P100 components," *Electroencephalography and Clinical Neurophysiology*, vol. 75, no. 1, pp. 13–21, Feb. 1990. [Online]. Available: https://www.sciencedirect.com/science/article/pii/001346949090148D

[4] J. J. Gibson, "Observations on active touch," *Psychological Review*, vol. 69, no. 6, pp. 477–491, 1962. [Online]. Available: http://dx.doi.org/10.1037/h0046962

[5] C. Simões-Franklin, T. A. Whitaker, and F. N. Newell, "Active and passive touch differentially activate somatosensory cortex in texture perception," *Human Brain Mapping*, vol. 32, no. 7, pp. 1067–1080, 2011. [Online]. Available: https://onlinelibrary.wiley.com/doi/abs/10.1002/hbm.21091

[6] A. Moungou, E. Vezzoli, C. Lombart, B. Lemaire-Semail, J. Thonnard, and A. Mouraux, "A novel method using EEG to characterize the cortical processes involved in active and passive touch," in *2016 IEEE Haptics Symposium (HAPTICS)*, Apr. 2016, pp. 205–210, iSSN: 2324-7355.

[7] A. Moungou, J.-L. Thonnard, and A. Mouraux, "EEG frequency tagging to explore the cortical activity related to the tactile exploration of natural textures," *Scientific Reports*, vol. 6, p. 20738, Feb. 2016.

[8] T. J. Prescott, M. E. Diamond, and A. M. Wing, "Active touch sensing," *Philosophical Transactions of the Royal Society B: Biological Sciences*, vol. 366, no. 1581, pp. 2989–2995, Nov. 2011, publisher: Royal Society. [Online]. Available: https://royalsocietypublishing.org/doi/full/10.1098/rstb.2011.0167

[9] C. A. Nelson and J. P. McCleery, "Use of Event-Related Potentials in the Study of Typical and Atypical Development," *Journal of the American Academy of Child and Adolescent Psychiatry*, vol. 47, no. 11, pp. 1252–1261, Nov. 2008. [Online]. Available: https://www.ncbi.nlm.nih.gov/pmc/articles/PMC2791670/

[10] S. Sutton, M. Braren, J. Zubin, and E. R. John, "Evoked-Potential Correlates of Stimulus Uncertainty," *Science*, vol. 150, no. 3700, pp. 1187–1188, Nov. 1965, publisher: American Association for the Advancement of Science. [Online]. Available: https://www.science.org/doi/abs/10.1126/science.150.3700.1187

[11] H. G. Vaughan, "The neural origins of human event-related potentials," *Annals of the New York Academy of Sciences*, vol. 388, pp. 125–138, 1982.

[12] M. P. Deiber, M. H. Giard, and F. Mauguiere, "Separate generators with distinct orientations for N20 and P22 somatosensory evoked potentials to finger stimulation?" *Electroencephalography and Clinical Neurophysiology/Evoked Potentials Section*, vol. 65, no. 5, pp. 321–334, Sep. 1986. [Online]. Available: https://www.sciencedirect.com/science/article/pii/0168559786900122

[13] J. E. Desmedt and M. Bourguet, "Color imaging of parietal and frontal somatosensory potential fields evoked by stimulation of median or posterior tibial nerve in man," *Electroencephalography and Clinical Neurophysiology/Evoked Potentials Section*, vol. 62, no. 1, pp. 1–17, Jan. 1985. [Online]. Available: https://www.sciencedirect.com/science/article/pii/0168559785900309

[14] N. Shaw, "The Origin of the N20 Component of the Somatosensory Evoked Potential in Man," *Australian Journal of Experimental Biology and Medical Science*, vol. 64, no. 5, pp. 471–475, 1986, _eprint: https://onlinelibrary.wiley.com/doi/pdf/10.1038/icb.1986.50. [Online]. Available: https://onlinelibrary.wiley.com/doi/abs/10.1038/icb.1986.50

[15] T. Allison, G. McCarthy, C. C. Wood, and S. J. Jones, "Potentials evoked in human and monkey cerebral cortex by stimulation of the median nerve. A review of scalp and intracranial recordings," *Brain*, vol. 114 (Pt 6), pp. 2465–2503, Dec. 1991. [Online]. Available: https://doi.org/10.1093/brain/114.6.2465

[16] J. K. Dionne, W. Legon, and W. R. Staines, "Crossmodal influences on early somatosensory processing: interaction of vision, touch, and task-relevance," *Experimental Brain Research*, vol. 226, no. 4, pp. 503–512, May 2013. [Online]. Available: https://doi.org/10.1007/s00221-013-3462-z

[17] M. Eimer and B. Forster, "Modulations of early somatosensory ERP components by transient and sustained spatial attention," *Experimental Brain Research*, vol. 151, no. 1, pp. 24–31, Jul. 2003. [Online]. Available: https://doi.org/10.1007/s00221-003-1437-1

[18] T. Allison, G. McCarthy, and C. C. Wood, "The relationship between human long-latency somatosensory evoked potentials recorded from the cortical surface and from the scalp," *Electroencephalography and Clinical Neurophysiology/Evoked Potentials Section*, vol. 84, no. 4, pp. 301–314, Jul. 1992. [Online]. Available: https://www.sciencedirect.com/science/article/pii/016855979290082M

[19] S. J. Lederman and R. L. Klatzky, "Extracting object properties through haptic exploration," *Acta Psychologica*, vol. 84, no. 1, pp. 29–40, Oct. 1993.

[20] N. Mizrachi, G. Nelinger, E. Ahissar, and A. Arieli, "Idiosyncratic selection of active touch for shape perception," *Scientific Reports*, vol. 12, no. 1, p. 2922, Feb. 2022, publisher: Nature Publishing Group. [Online]. Available: https://www.nature.com/articles/s41598-022-06807-2

[21] G. Cruccu, M. J. Aminoff, G. Curio, J. M. Guerit, R. Kakigi, F. Mauguiere, P. M. Rossini, R. D. Treede, and L. Garcia-Larrea, "Recommendations for the clinical use of somatosensory-evoked potentials," *Clinical Neurophysiology*, vol. 119, no. 8, pp. 1705–1719, Aug. 2008. [Online]. Available: https://www.sciencedirect.com/science/article/pii/S1388245708002046

[22] P. M. Rossini, R. Q. Cracco, J. B. Cracco, and W. J. House, "Short latency somatosensory evoked potentials to peroneal nerve stimulation: Scalp topography and the effect of different frequency filters," *Electroencephalography and Clinical Neurophysiology*, vol. 52, no. 6, pp. 540–552, Dec. 1981. [Online]. Available: https://www.sciencedirect.com/science/article/pii/0013469481914292

[23] L. E. Miller, M. R. Longo, and A. P. Saygin, "Tool use modulates somatosensory cortical processing in humans," *Journal of Cognitive Neuroscience*, vol. 31, no. 12, pp. 1782–1795, 2019, place: US Publisher: MIT Press.

[24] E. Maris and R. Oostenveld, "Nonparametric statistical testing of EEG- and MEG-data," *Journal of Neuroscience Methods*, vol. 164, no. 1, pp. 177–190, Aug. 2007. [Online]. Available: https://www.sciencedirect.com/science/article/pii/S0165027007001707

[25] E. N. van den Broeke, A. Mouraux, A. H. Groneberg, D. B. Pfau, R.-D. Treede, and T. Klein, "Characterizing pinprick-evoked brain potentials before and after experimentally induced secondary hyperalgesia," *Journal of Neurophysiology*, vol. 114, no. 5, pp. 2672–2681, Nov. 2015, publisher: American Physiological Society. [Online]. Available: https://journals.physiology.org/doi/full/10.1152/jn.00444.2015

[26] D. M. Groppe, T. P. Urbach, and M. Kutas, "Mass univariate analysis of event-related brain potentials/fields I: A critical tutorial review," *Psychophysiology*, vol. 48, no. 12, p. 1711, Sep. 2011. [Online]. Available: https://pmc.ncbi.nlm.nih.gov/articles/PMC4060794/

[27] D. Brahimaj, G. Esposito, A. Courtin, F. Giraud, B. Semail, O. Collignon, and A. Mouraux, "Temporal detection threshold of audio-tactile delays under conditions of active touch with and without a visual cue," in *2023 IEEE World Haptics Conference (WHC)*, Jul. 2023, pp. 354–360, iSSN: 2835-9534. [Online]. Available: https://ieeexplore.ieee.org/abstract/document/10224451

[28] M. Casado-Palacios, A. Tonelli, C. Campus, and M. Gori, "Movement-related tactile gating in blindness," *Scientific Reports*, vol. 13, no. 1, p. 16553, Oct. 2023, publisher: Nature Publishing Group. [Online]. Available: https://www.nature.com/articles/s41598-023-43526-8

[29] S. Eldeeb, D. Weber, J. Ting, A. Demir, D. Erdogmus, and M. Akcakaya, "EEG-based trial-by-trial texture classification during active touch," *Scientific Reports*, vol. 10, no. 1, p. 20755, Nov. 2020. [Online]. Available: https://www.nature.com/articles/s41598-020-77439-7

[30] J. Henderson, T. Mari, A. Hopkinson, A. Byrne, D. Hewitt, A. Newton-Fenner, T. Giesbrecht, A. Marshall, A. Stancák, and N. Fallon, "Neural correlates of texture perception during active touch," *Behavioural Brain Research*, vol. 429, p. 113908, Jul. 2022. [Online]. Available: https://www.sciencedirect.com/science/article/pii/S0166432822001760

[31] J. Henderson, T. Mari, A. Hopkinson, D. Hewitt, A. Newton-Fenner, T. Giesbrecht, A. Marshall, A. Stancak, and N. Fallon, "Neural correlates of perceptual texture change during active touch," *Frontiers in Neuroscience*, vol. 17, 2023. [Online]. Available: https://www.frontiersin.org/articles/10.3389/fnins.2023.1197113

[32] Y. Iwamura, "Hierarchical somatosensory processing," *Current Opinion in Neurobiology*, vol. 8, no. 4, pp. 522–528, Aug. 1998. [Online]. Available: https://www.sciencedirect.com/science/article/pii/S095943889880041X

[33] K. Whitehead, C. Papadelis, M. P. Laudiano-Dray, J. Meek, and L. Fabrizi, "The Emergence of Hierarchical Somatosensory Processing in Late Prematurity," *Cerebral Cortex*, vol. 29, no. 5, pp. 2245–2260, May 2019. [Online]. Available: https://doi.org/10.1093/cercor/bhz030

[34] J. E. Desmedt, T. Huy Nguyen, and M. Bourguet, "Bit-mapped color imaging of human evoked potentials with reference to the N20, P22, P27 and N30 somatosensory responses," *Electroencephalography and Clinical Neurophysiology/Evoked Potentials Section*, vol. 68, no. 1, pp. 1–19, Jan. 1987. [Online]. Available: https://www.sciencedirect.com/science/article/pii/0168559787900657

[35] N. Forss, I. Merlet, S. Vanni, M. Ha¨ma¨la¨inen, F. Mauguie're, and R. Hari, "Activation of human mesial cortex during somatosensory target detection task," *Brain Research*, vol. 734, no. 1, pp. 229–235, Sep. 1996. [Online]. Available: https://www.sciencedirect.com/science/article/pii/0006899396006336

[36] H. Hogendoorn, M. Kammers, P. Haggard, and F. Verstraten, "Self-touch modulates the somatosensory evoked P100," *Experimental Brain Research*, vol. 233, no. 10, pp. 2845–2858, Oct. 2015. [Online]. Available: https://doi.org/10.1007/s00221-015-4355-0

[37] A. Mouraux and G. D. Iannetti, "Nociceptive Laser-Evoked Brain Potentials Do Not Reflect Nociceptive-Specific Neural Activity," *Journal of Neurophysiology*, vol. 101, no. 6, pp. 3258–3269, Jun. 2009, publisher: American Physiological Society. [Online]. Available: https://journals.physiology.org/doi/full/10.1152/jn.91181.2008

[38] B. Delhaye, A. Barrea, B. B. Edin, P. Lefèvre, and J.-L. Thonnard, "Surface strain measurements of fingertip skin under shearing," *Journal of The Royal Society Interface*, vol. 13, no. 115, p. 20150874, Feb. 2016, publisher: Royal Society. [Online]. Available: https://royalsocietypublishing.org/doi/full/10.1098/rsif.2015.0874

[39] C. M. Greenspon, K. R. McLellan, J. D. Lieber, and S. J. Bensmaia, "Effect of scanning speed on texture-elicited vibrations," *Journal of The Royal Society Interface*, vol. 17, no. 167, p. 20190892, Jun. 2020, publisher: Royal Society. [Online]. Available: https://royalsocietypublishing.org/doi/full/10.1098/rsif.2019.0892

[40] D. Doumont, A. R. Kao, J. Lambert, F. Wielant, G. J. Gerling, B. P. Delhaye, and P. Lefèvre, "3-D Reconstruction of Fingertip Deformation during Contact Initiation," Feb. 2025, pages: 2025.02.10.637366 Section: New Results. [Online]. Available: https://www.biorxiv.org/content/10.1101/2025.02.10.637366v1

[41] C. E. Chapman, "Active versus passive touch: factors influencing the transmission of somatosensory signals to primary somatosensory cortex," *Canadian Journal of Physiology and Pharmacology*, vol. 72, no. 5, pp. 558–570, May 1994. [Online]. Available: http://www.nrcresearchpress.com/doi/10.1139/y94-080

[42] P. M. Rossini, C. Babiloni, F. Babiloni, A. Ambrosini, P. Onorati, F. Carducci, and A. Urbano, ""Gating" of human short-latency somatosensory evoked cortical responses during execution of movement. A high resolution electroencephalography study," *Brain Research*, vol. 843, no. 1, pp. 161–170, Oct. 1999. [Online]. Available: https://www.sciencedirect.com/science/article/pii/S0006899399017163

[43] S. A. Ageranioti-Bélanger and C. E. Chapman, "Discharge properties of neurones in the hand area of primary somatosensory cortex in monkeys in relation to the performance of an active tactile discrimination task," *Experimental Brain Research*, vol. 91, no. 2, pp. 207–228, Oct. 1992. [Online]. Available: https://doi.org/10.1007/BF00231655

[44] S. Eldeeb, J. Ting, D. Erdogmus, D. Weber, and M. Akcakaya, "EEG-Based Texture Classification During Active Touch," in *2019 IEEE 29th International Workshop on Machine Learning for Signal Processing (MLSP)*, Oct. 2019, pp. 1–6, iSSN: 1551-2541. [Online]. Available: https://ieeexplore.ieee.org/abstract/document/8918777

[45] B. Rohou-Claquin, A. Kaci, B. Lemaire-Semail, and D. Gueorguiev, "Recognition of 2D Shapes with Varying Complexity and Thickness on an Ultrasonic Tactile Display," in *Haptics: Understanding Touch; Technology and Systems; Applications and Interaction*, H. Kajimoto, P. Lopes, C. Pacchierotti, C. Basdogan, M. Gori, B. Lemaire-Semail, and M. Marchal, Eds. Cham: Springer Nature Switzerland, 2025, pp. 48–60.

[46] R. Abreu, A. Leal, and P. Figueiredo, "EEG-Informed fMRI: A Review of Data Analysis Methods," *Frontiers in Human Neuroscience*, vol. 12, Feb. 2018, publisher: Frontiers. [Online]. Available: https://www.frontiersin.org/journals/human-neuroscience/articles/10.3389/fnhum.2018.00029/full